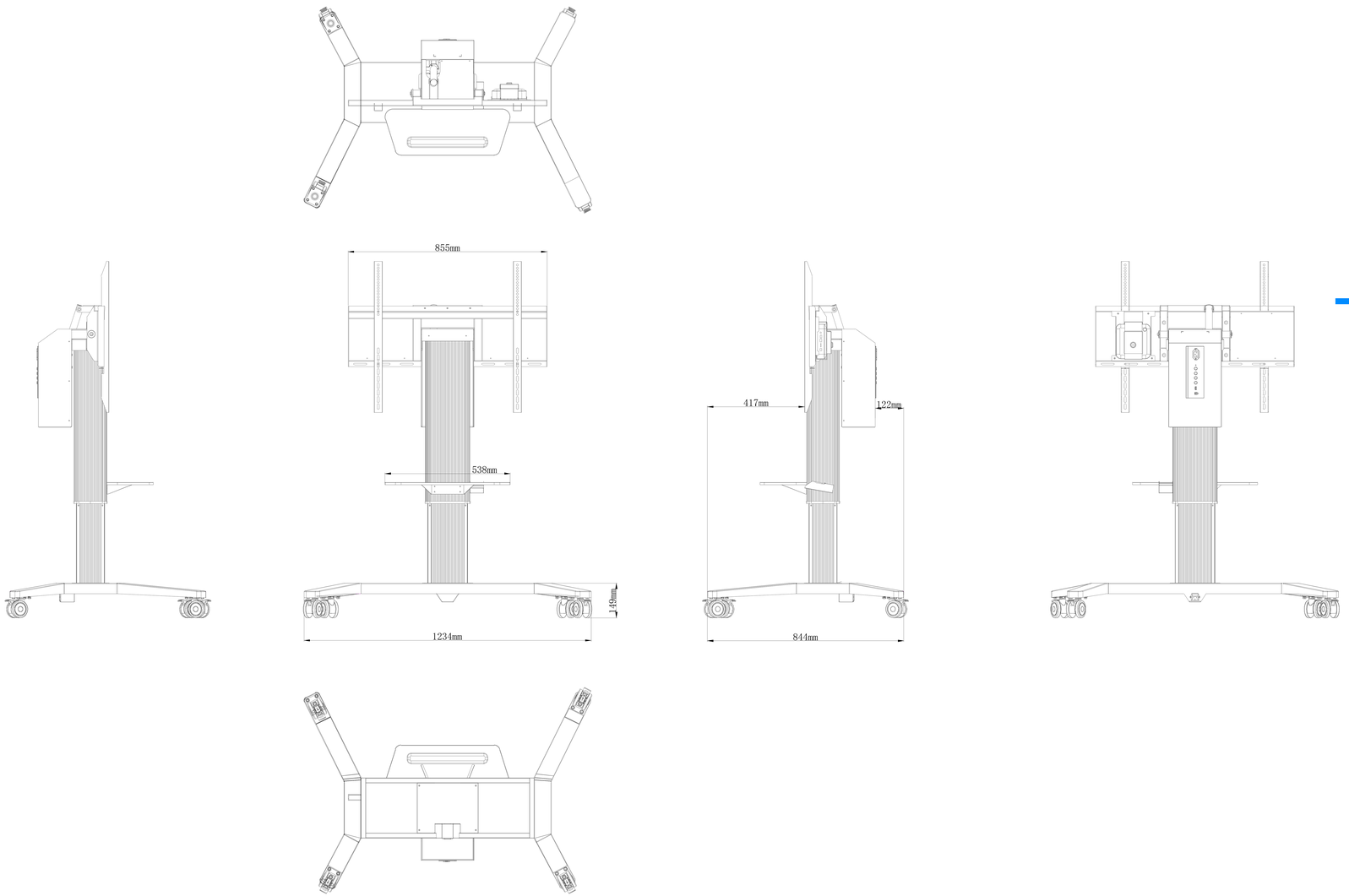

VB-STND-003

1:1

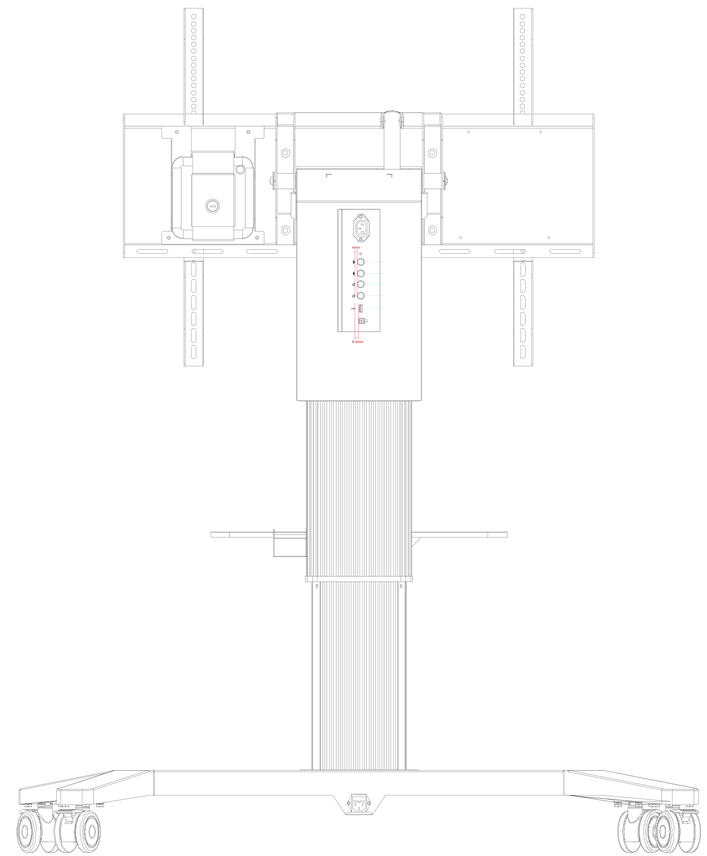

ViewSonic

Model Name:
VB-STND-003

Product Color: Black

Silkscreen Description

Graphic: Scale: 1:1

- Size: 4x0.8 mm Color: Pantone 427C
- Size: 4x0.8 mm Color: Pantone 427C
- Size: 4.5x0.8 mm Color: Pantone 427C
- Size: 4.5x0.2 mm Color: Pantone 427C
- Size: 8x0.2 mm Color: Pantone 427C

Color: Pantone 427C

UNIT: mm	Scale: 1:1	Date: 05/14/2018	DCN #: VS-D180048